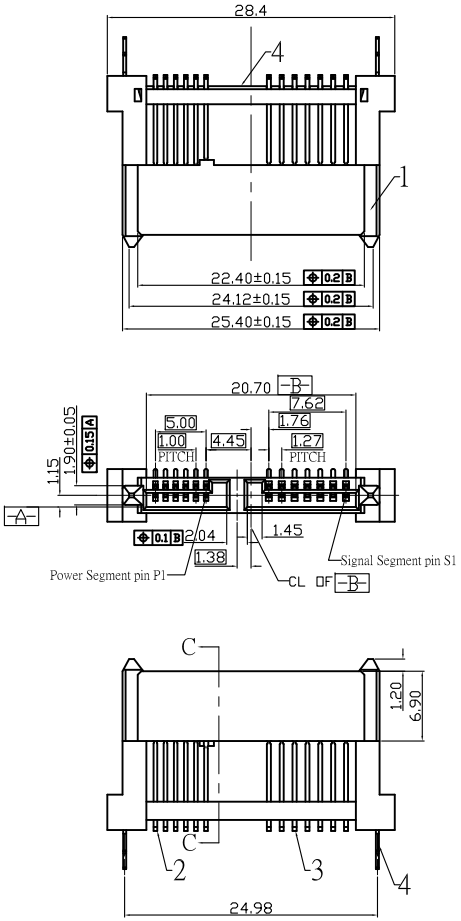

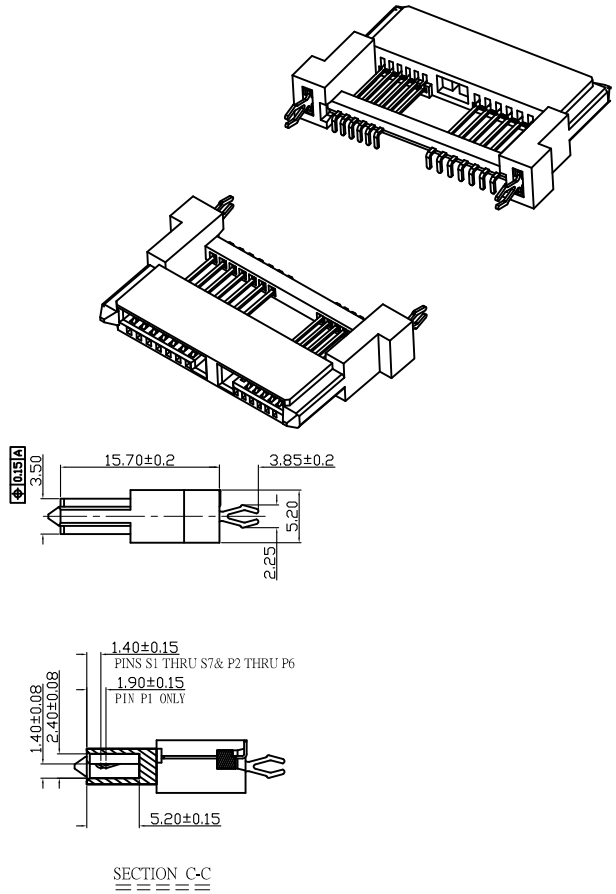

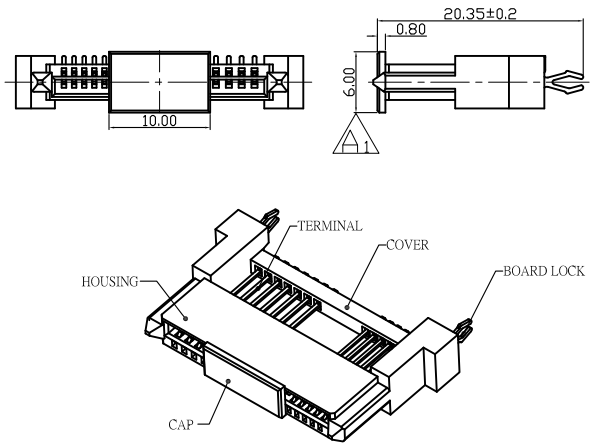

WITH CAP DRAWING

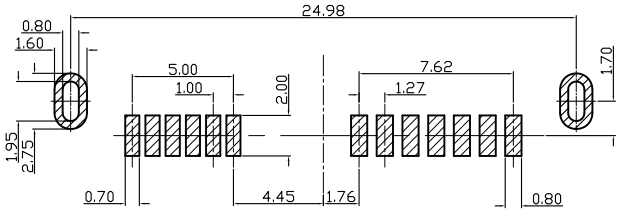

RECOMMENDED PCB LAYOUT(TOP VIEW SCALE 2:1)

PCB THICKNESS:2.0±0.10MM

BUILD OF MATERIAL:

項次	名稱	料號	材質	電鍍或顏色	數量	備註
1	SATA 7+6P母頭（SMT)-膠體	CD000982007-1	High-temperature plastics	BLACK	1	注塑件
2	SATA 7+6P母頭（SMT)-6P端子	CD000982007-2XX	phosphor bronze t=0.25mm	SEE TABLE	6	沖壓件
3	SATA 7+6P母頭（SMT)-7P端子	CD000982007-3XX	phosphor bronze t=0.25mm	SEE TABLE	7	沖壓件
4	SATA 7+6P母頭（SMT)-PCB固定片	CD000982007-4	phosphor bronze t=0.30mm	TIN PLATED	2	沖壓件
5	SATA 7+6P母頭（SMT)-後塞	CD000982007-5	High-temperature plastics	BLACK	1	注塑件
6	SATA 7+6P母頭（SMT)-前蓋	CD000982007-6	High-temperature plastics	BLACK	1	注塑件

TABLE:

XX	電鍍
01	G.F/TIN PLATED前金後錫
02	3U" G/TIN PLATED前金後錫
03	5U" G/TIN PLATED前金後錫
04	10u" G/TIN PLATED前金後錫
05	15U" G/TIN PLATED前金後錫
06	30U" G/TIN PLATED前金後錫

Specification

*Electrical Characteristics:

Contact Current Rating 1.5A/pin

Dielectric Withstanding Voltage:AC 500V/ 1minute

Insulation Resistance:1000MΩ Min.

Contact -Resistance:30mΩ Max.

*Environmental:

operating Temperature:-25°~+85°.

東莞世華電子有限公司
SHYH HWA ELECTRONICS CO.,LTD.(DONGGUAN)
地址:東莞市塘厦鎮諸佛嶺178工業區
TEL:0769-87910020-1 FAX:0769-87910210

DRAWN BY	曹 浩	ITEM	SATA 7+6P 母頭（SMT）	ANGLE PROJECTION	UNIT	mm			
CHECKED BY					SCALE	1:1	A1	工程變更 前蓋寬度	07/22/2010
APPROVED BY		PART NO	CD000982007-XX	TOLERANCE .X±0.25 .XX±0.15	DATE	07/22/2010	REVISION	DESCRIPTION	DATE